Lumca

PR8475 / PR8275

# COSMO
FAMILY

COSMO
FAMILY

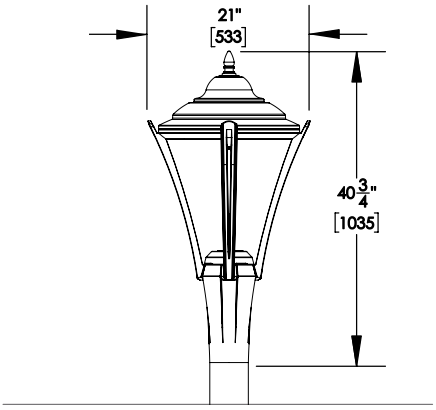

PR8475

PR8275

## Distribution

| Type I | Type II | Type III |
|---|---|---|
| L1 | L2B | L3 |

| Type III | Type IV* | Type V |
|---|---|---|
| L3FL | L4 | L5S |

## CCT

| 3000K | 4000K |
|---|---|
| | |

## CRI

C80

## Features

## Source

Type I-II-III-V

| 530mA | 700mA |
|---|---|
| **18** LED **05** 30 W | **18** LED **07** 40 W |
| **36** LED **05** 60 W | **36** LED **07** 80 W |
| **54** LED **05** 90 W | **54** LED **07** 120 W |
| **72** LED **05** 120 W | |

Type IV*

| 530mA | 700mA |
|---|---|
| **12** LED **05** 20 W | **12** LED **07** 27 W |
| **24** LED **05** 40 W | **24** LED **07** 54 W |
| **36** LED **05** 60 W | **36** LED **07** 80 W |
| **48** LED **05** 80 W | **48** LED **07** 107 W |

## PR8475

- 1 to 4 modules LED (30 to 120 Watt)
- Up to 20 000 lumens
- Weight: 40lb - 18.1kg
- EPA: 1.37ft$^2$

## PR8275

- 1 to 4 modules LED (30 to 120 Watt)
- Up to 20 000 lumens
- Weight: 40lb - 18.1kg
- EPA: 1.36ft$^2$

## Description

A sleek new line of LED lights that blend harmoniously in any contemporary urban design. A touch of muted luxury that goes a long way.

## Construction

- Aluminum A380 (Die casting)
- Minimum wall thickness of 0,125" [3 mm]
- Stainless steel hardware

## Optical system

- 0.1875''[5mm] tempered glass optical system
- Aluminum heat sink dissipator
- High intensity white light emitting diodes (LED)
- IP66

## Driver

- Constant current, -40°C [-40°F] à 80°C [176°F], PF 0,99, 0-10V, 120 à 277V / 347 à 480V.
- Option : Programmable driver (PRG).
- Stainless steel hardware

## Volts

120 - 208 - 240- 240 - 277 - 347 - 480

## Finish

- Plaforization (All metallic parts are pretreated using an environmentally friendly organic phosphating technology )
- Polyester powder coating
- Minimum thickness of 100 microns
- Meet ASTM B117 standards
- Meet ASTM D2247 standards

## Availables options

- RCD-DOF Communication Node DIMONOFF + ANTENNA
- HSS House side shield on optic
- SGP Surge protector
- BTP Button type photocell
- TR Tenon reducer
- PRG Programmable driver

## ACCENT RING FOR 5'' Ø POLES

Black
(RA-B)

Silver
(RA-S)

Red
(RA-R)

Orange
(RA-O)

## BASE COVER

Available for 4'', 5''Ø poles

**Base cover**

Product code:
WB24-4

**Base cover**

Product code:
WB24-5

Date

City

Project name

Type

Qty.

Color charts

IES files

Photometrics chart

Options datasheet

| Product code | Source | Distribution | CCT | Volts | Pole height | Pole diameter | Color | Accent ring | Base cover | Options |
|---|---|---|---|---|---|---|---|---|---|---|
| PR8275 | --- | --- | --- | --- | --- | --- | ---- | --- | WB24-5 | |
| PR8475<br>PR8275 | Type I-II-III-V<br>18LED30W-530mA<br>36LED60W-530mA<br>54LED90W-530mA<br>72LED120W-530mA<br>18LED40W-700mA<br>36LED80W-700mA<br>54LED120W-700mA<br><br>Type IV*<br>12LED20W-530mA<br>24LED40W-530mA<br>36LED60W-530mA<br>48LED80W-530mA<br>12LED27W-700mA<br>24LED54W-700mA<br>36LED80W-700mA<br>48LED107W-700mA | L1<br>L2B<br>L3<br>L3FL<br>L4*<br>L5 | 3000K<br>4000K | 120<br>208<br>240<br>277<br>347<br>480 | 10'-0¨<br>(3.05M)<br>to<br>19'-0¨<br>(5.79M) | 4''Ø<br>5''Ø | *see color chart* | RA-B[1]<br>RA-S[1]<br>RA-R[1]<br>RA-O[1] | WB24-4<br>WB24-5 | *Fill table below* |

Code example: PR8475 36LED07 80W 40K L3 120 AP04 R4R WBC4 AP04-14 WB27-4 SG

| Communication node | Photocell | BTP | House side shield | Surge protector | PRG | TR | Anchor bolts |
|---|---|---|---|---|---|---|---|
| ---- | ---- | ---- | ---- | ---- | ---- | ---- | ---- |
| RCD-DOF<br>DIMONOFF + ANTENNA | TRP7 | Boutton type Photocell | HSS | SGP-10<br>SGP-20<br>SGP-10HV<br>SGP-20HV | Programmable driver | Tenon reducer Existing | Supplied by Lumca<br>Supplied by others<br>Existing |

Notes

1. Only available with 5''Ø pole

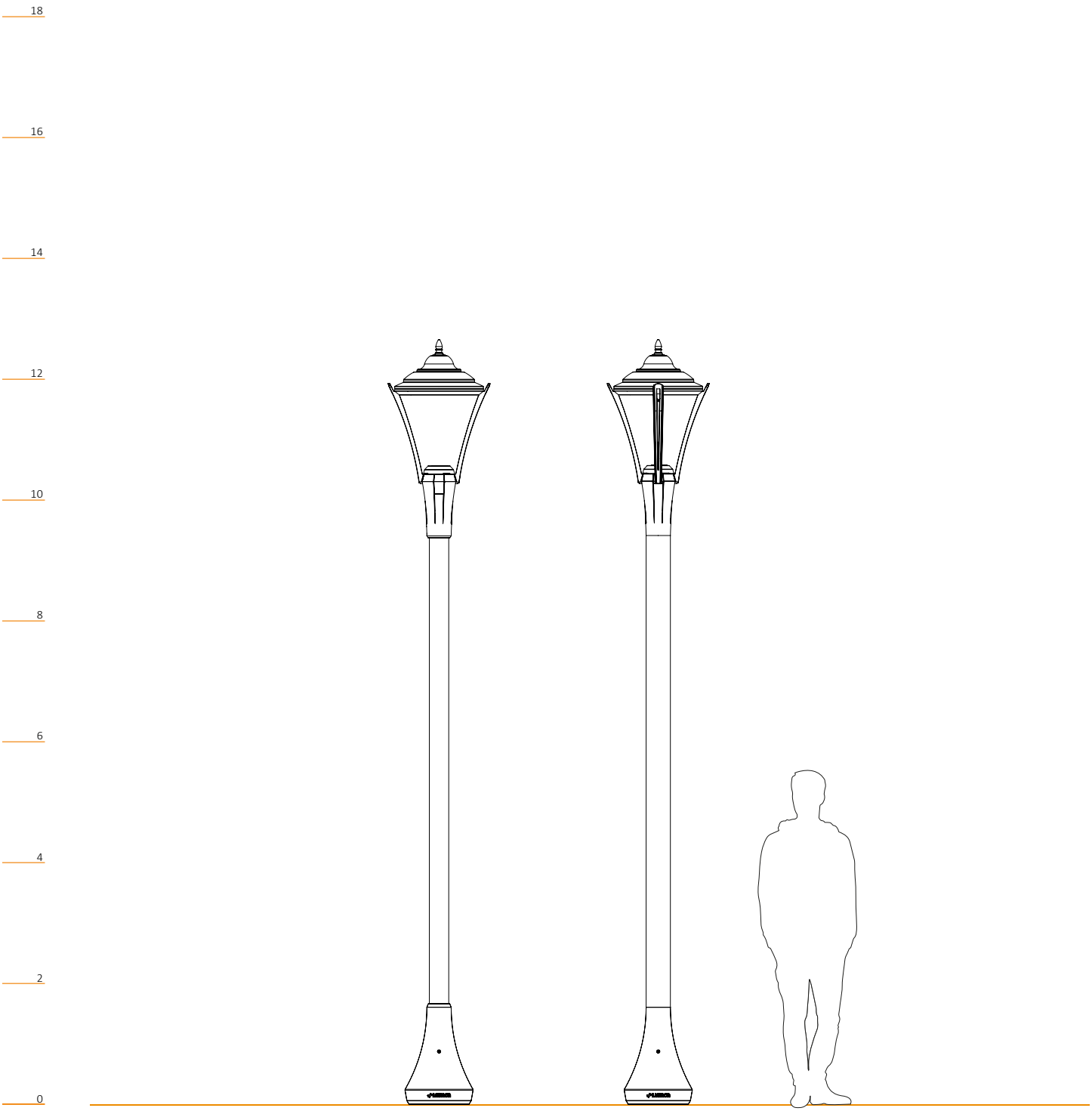


Luminaire: PR8276
Pole: AP04-10
Base cover: WB24-4

Luminaire: PR8476
Post: AP54-10
Base cover: WB24-5

Lumca
LIGHTING LIFE

1 877 650-1693
2645-A, Avenue Watt
Québec (Québec)
G1P 3T2 Canada

Lumca reserves the right to modify the elements on this technical data sheet without prior notice